X.1 - LOGICAL DIAGRAM

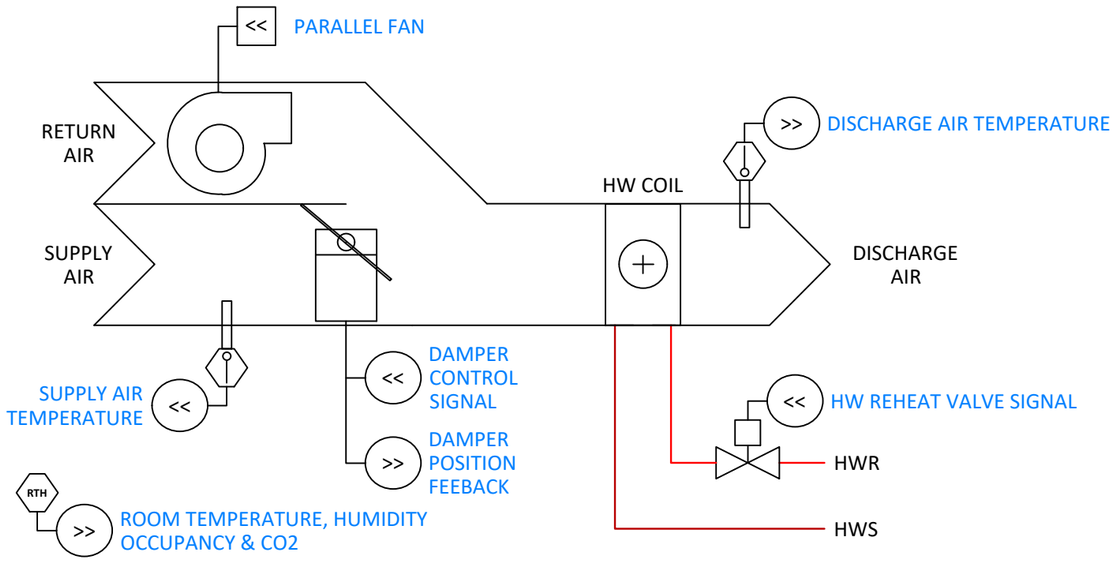

X.2 - POINTS LIST

SMART NODE					
DESCRIPTION	**POINT**	**TAG**	**DEVICE RANGE**	**MFG**	**PART #**
DAMPER POSITION FEEDBACK	UI1	DMPR	0-10VDC FEEDBACK = 0-100% OPEN	75F	7X-AT-C6X-X
SPARE	UI2		DIGITAL / 10K TYPE II / 0-10VDC		
DISCHARGE AIR TEMPERATURE	UI3	DAT	°F (10K TYPE II)	75F	3X-SE-C29X-X
ENTERING AIR TEMPERATURE	UI4	SAT	°F (10K TYPE II)	75F	3X-SE-C29X-X
DAMPER CONTROL SIGNAL	AO1	DMPR	0-10VDC = 0-100% OPEN	75F	7X-AT-C6X-X
REHEAT	AO2	RHT	2-10VDC = 0-100% OPEN		
SPARE	AO3		0-10VDC / 4-20mA		
SPARE	AO4		0-10VDC / 4-20mA		
SPARE	RELAY 1		DRY CONTACT		
FAN ENABLE	RELAY 2	FAN	CC = ENABLE	-	3X-RB-C3X-X
SPARE	RELAY 3		DRY CONTACT		
SPARE	RELAY 4		DRY CONTACT		
SPARE	POR		2-WIRE POR		
TEMP, HUMIDITY, OCC & CO2	SENSOR BUS	MS	3-WIRE SENSOR BUS		7X-SE-C77X-X
SPARE	RS-485		3-WIRE RS-485		
24VAC IN/OUT	POWER IN	24VAC IN	24VAC		

X.3 - PHYSICAL DIAGRAM

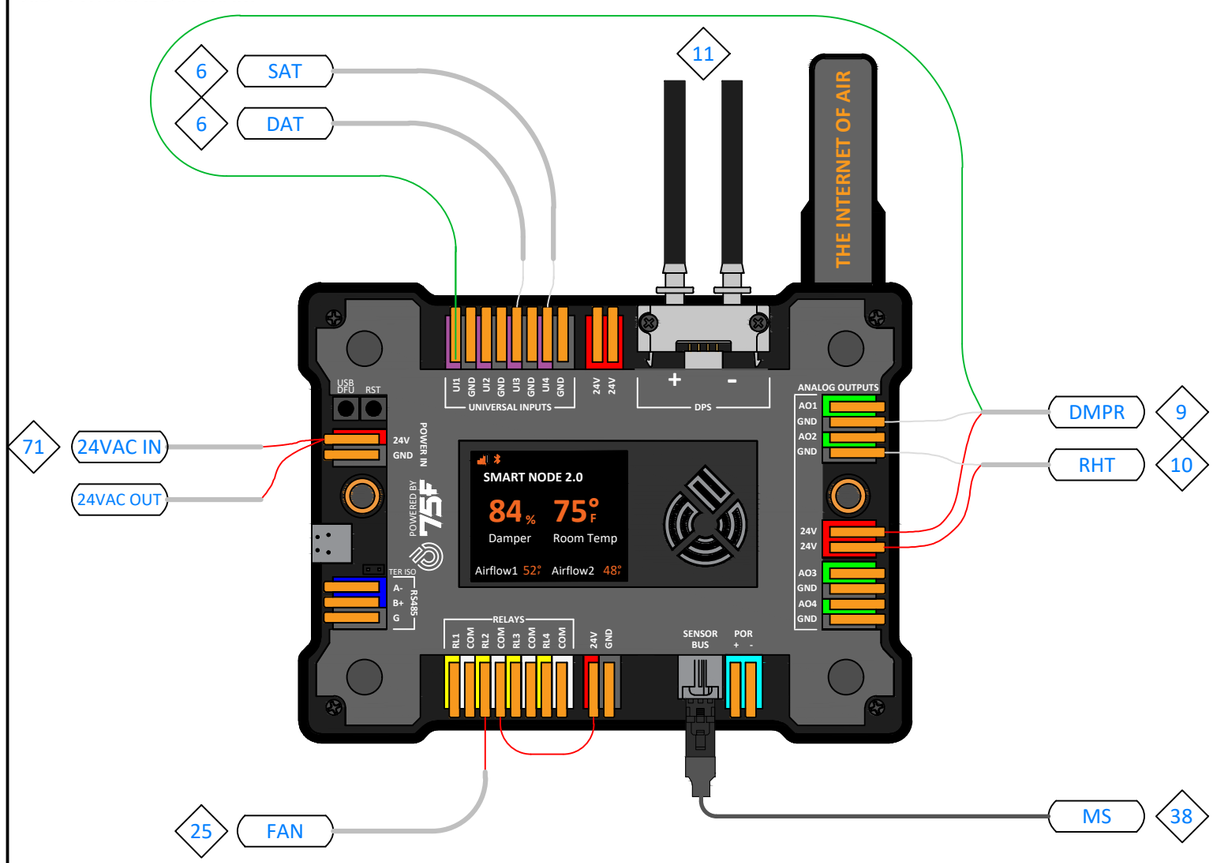

X.4 - SEQUENCE OF OPERATION

THE CONTROLLER MODULATES THE SUPPLY AIR DAMPER TO AND HOT WATER VALVE TO MAINTAIN THE SPACE TEMPERATURE SETPOINT.

COOLING

1. WHEN THE SYSTEM IS IN COOLING MODE AND THE ZONE REQUIRES COOLING, THE AIRFLOW SETPOINT WILL INCREASE FROM THE MINIMUM TO THE MAXIMUM COOLING AIRFLOW SETPOINT AS THE COOLING LOAD INCREASES. THE DAMPER MODULATES TO MAINTAIN THE AIRFLOW SETPOINT.

HEATING

1. WHEN THE ZONE REQUIRES HEATING, THE PARALLEL FAN WILL BE ENABLED
2. WHEN THE SYSTEM IS IN COOLING AND THE ZONE REQUIRES HEATING, AS THE ZONE HEATING LOAD INCREASES, THE DISCHARGE AIR TEMPERATURE WILL BE RESET FROM THE HEATING DESIRED TEMPERATURE TO THE MAXIMUM SETPOINT (ADJ.). THE DAMPER WILL MODULATE TO THE MINIMUM HEATING AIRFLOW SETPOINT UNTIL THE CURRENT DISCHARGE AIR TEMPERATURE (DAT) REACHES ITS MAXIMUM SETPOINT. ONCE THE DAT SETPOINT IS RESET TO ITS MAXIMUM, THE AIRFLOW SETPOINT WILL BE RESET FROM THE MINIMUM TO THE MAXIMUM HEATING AIRFLOW SETPOINT. IF THE TEMPERATURE DIFFERENCE ACROSS THE REHEAT COIL IS LESS THAN 9°F (ADJ.), THE DAMPER WILL REMAIN AT ITS MINIMUM POSITION.
3. WHEN THE SYSTEM IS IN HEATING AND THE ZONE REQUIRES HEATING, THE DAMPER WILL MODULATE TO NEAR ITS MAXIMUM POSITION UNTIL THE ZONE IS SATISFIED. ONCE ANY ZONE REQUIRES COOLING, THE SYSTEM WILL STOP PROVIDING HEAT AND WILL SWITCH BACK INTO COOLING.

75F COMMISSIONING NOTES

- EACH OF THE ZONE CONTROLS SHOULD BE PAIRED AS A 'VAV REHEAT - PARALLEL FAN' ZONE PROFILE.
- CONFIGURE:
  - DAMPER TYPE: 0-10V
  - SIZE: DETERMINED BY INSTALLER
  - SHAPE: DETERMINED BY INSTALLER
  - REHEAT TYPE: 2-10V (FIELD VERIFY ACTUATOR SETTINGS)
  - ZONE PRIORITY: NORMAL
  - AUTO FORCE OCCUPIED: DISABLED (UNLESS REQUIRED)
  - AUTO AWAY: DISABLED (UNLESS REQUIRED)
  - ENABLE CFM CONTROL: ENABLED
  - K-FACTOR: DETERMINED BY INSTALLER
- SET ALL CFM SETPOINTS PER PROJECT SPECIFICATION

Drawing Notes:	75F	**Project Name:** 75F DESIGN MASTER REV. 1.4
①		**Project Address:**
②		
③		**DB:** **CB:** **Page:** of
	Drawing:	PARALLEL FPVAV (HW) WITH MS - SNV2